TML - HW 1328 - 1528 - 1728 - 2028

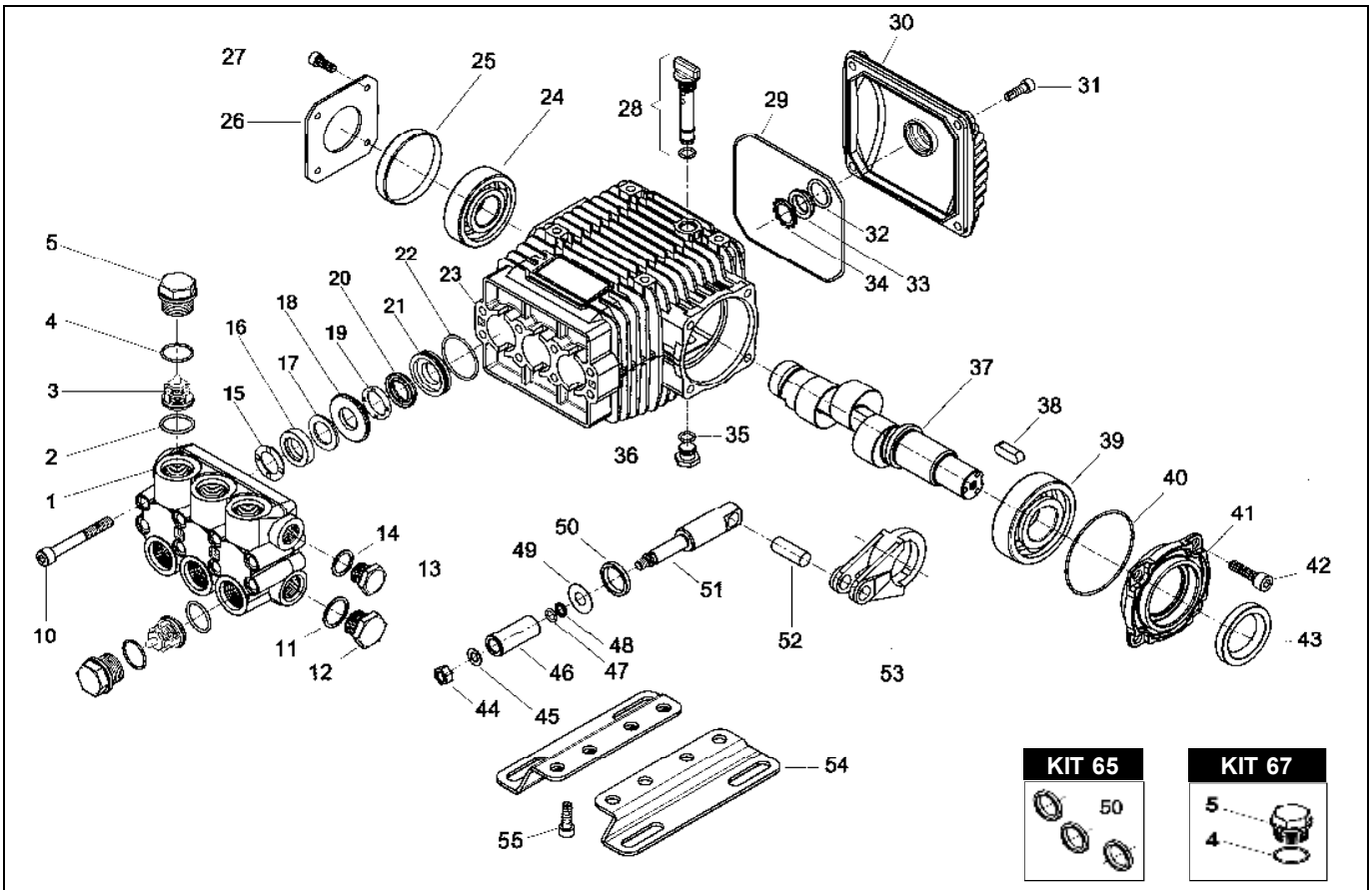

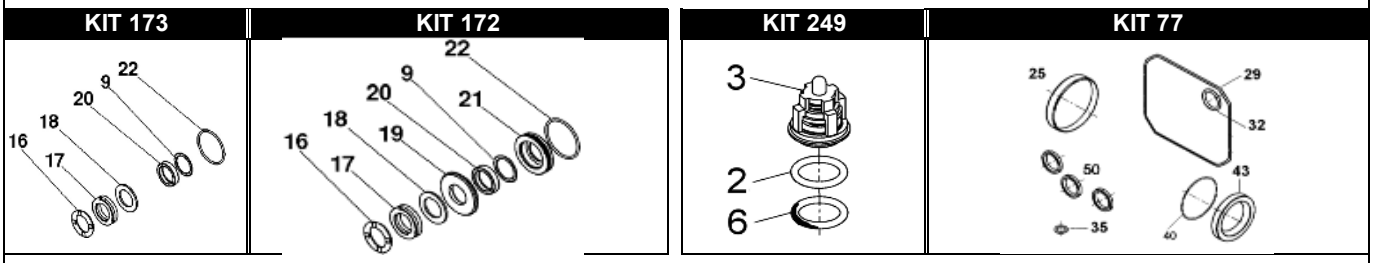

POS.	CODICE PART NO. RÉF.	DENOMINAZIONE - DESCRIPTION - DESCRIPTION	Q.TY
1	070136282	PUMP HEAD	1
2-kit 249	803095502	O-RING DIA.2X18	6
3-kit 249	069959973	CHECK VALVES	6
4-kit 67	803182802	O-RING DIA.2,62X17,13	6
5	070040532	EX. DEEP SEALING VALVE CAP M27x1,5 (before 10/2020)	6
5-kit 67	070040282	EX. DEEP SEALING VALVE CAP M27x1,5 (from 10/2020)	6
6-kit 249	040480542	ANTIEXTRUSION RING DIA.18,4X22X0,8	6
9	803073002	O-RING DIA. 1,78x23,52	3
10	862985002	SCREW TCEI M8X70 UNI 5931	8
11	824140002	GASKET FOR COUPLING 21,2X26X1	1
12	852629002	PLUG G 1/2"	1
12	852629532	PLUG G 1/2" BRASS (OPTIONAL)	1
13	852579002	PLUG G 3/8	1
13	852579532	PLUG G 3/8 BRASS (OPTIONAL)	1
14	824109002	COPPER GASKET DIA.17X22X1	1
16-kit 172-173	802058102	SEAL PACKER	3
17-kit 172-173	802058002	PACKING U 18x28	3
18-kit 172-173	802061702	EXTERNAL CHECK RING	3
19-kit 172	070133532	FRONT BRASS GLAND	3
20-kit 172-173	802058502	PACKING U 18x24 (PTFE)	3
21-kit 172	070134532	BACK BRASS GLAND	3
22-kit 172-173	803080002	O-RING	3
23	070001092	CRANKCASE	1
24	812730102	ROLLER BEARING	1
25-kit 77	802102002	COVER 62X07 RCA	1
26	050045612	CRANKCASE COVER	1
27	862108002	SCREW M6X16 UNI 5931	4
28	049832973	FILLER PLUG	1
29-kit 77	803210682	O-RING D.2,62X120,32	1
30	040117092	REAR COVER	1
31	862168002	GALVANISED SCREW M6X22 UNI 5931	4
32-kit 77	803189002	O-RING DIA.2,62X18,72	1

POS.	CODICE PART NO. RÉF.	DENOMINAZIONE - DESCRIPTION - DESCRIPTION	PCS.
33	040120322	OIL SIGHT GLASS	1
34	801184002	RING	1
35-kit 77	803057002	O-RING 2037 - 39,34 X 2,62	1
36	852543502	CAP G.1/4 X9 (EX 852542002) (EX 852542002)	1
37/2	070034262	CRANKSHAFT TML 1328 HW	1
37/3	070035262	CRANKSHAFT TML 1528 HW	1
37/4	070037262	CRANKSHAFT TML 1728 HW	1
37/5	070038262	CRANKSHAFT TML 2028 HW	1
38	806534002	TAB 8X7X35	1
39	812776202	ROLLER BEARING	1
40-kit 77	803080702	O-RING D.1,78X69,57	1
41	070003092	SUPPORT	1
42	862547002	SCREW M8X18	4
43-kit 77	802119002	OIL SEAL 30X52X7	1
44	070129512	STAINLESS STEEL NUT M8	3
45	843692002	WASHER DIA.8,2X17X1	3
46	070008182	CERAMIC PISTON DN18	3
47	803055002	O-RING DIA.1,78X7,76	3
48	803912002	BACKUP RING 2031 DIA.10,8	3
49	843826002	WASHER D.11,3X25X0,5 COPPER	3
50-kit 65-77	802063502	AXIAL RING	3
51	070010512	PLUNGER ROD	3
52	852006282	PISTON PIN	3
53	070005112	CONROD	3
54-optional	040247612	MOUNTING RAIL	2
55-optional	862495002	SCREW M8x16	4
56-optional	079802973	MOUTING RAIL KIT	1

REPAIR KIT		ITEM NO,s INCLUDED	PCS.
kit 65	049837973	SPARE PARTS KIT	3
kit 67	049839973	SPARE PARTS KIT	12
kit 77	079808973	SPARE PARTS KIT	9
kit 249	069956973	SPARE PARTS KIT	18
kit 172	079837973	SPARE PARTS KIT	24
kit 173	079838973	SPARE PARTS KIT	18